Standard product specifications

1104LS series

Features

Package	PLCC-2 type, Water clear resin Outline dimensions 3.5 x 2.8 x 1.9mm(L x W x H)
Product features	・Wide range temperature applicable product ・High reliability (for automotive applications and other high-reliability required applications) ・Lead–free soldering compatible ・RoHS compliant
Dominant wavelength	Green : 561nm (VFHG,VFJG) Yellow green : 570nm (VFHP,VFGP) 572nm (VFJP) Yellow : 589nm (VFHY,VFJY,VFGY) Orange : 606nm (VFHA,VFGA) Red : 616nm (VFHV,VFGV) : 626nm (VFHR) : 632nm (VFJR)

Recommended applications

・Automotive interior: Switch and buttons , meter panel, car audio , HVAC, etc.

Outline dimensions

Unit : mm
Weight : 33mg
Tolerance : ±0.2

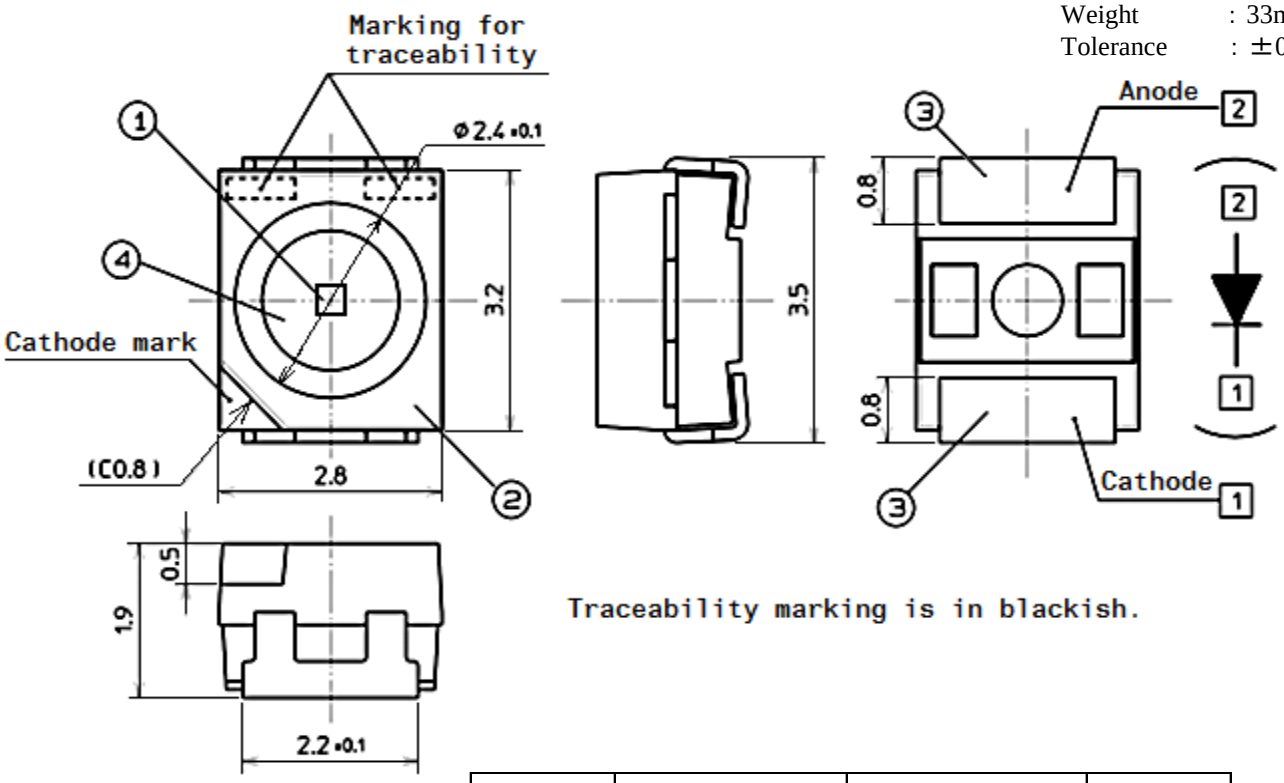

NO.	PART NAME	REMARKS	QTY.
①	LED Die	AlGaInP	1
②	Lamp housing	White resin	1
③	Electrode	Pd/Au plating	2
④	Encapsulant	Silicorne resin	1

Recommended pad

Unit : mm

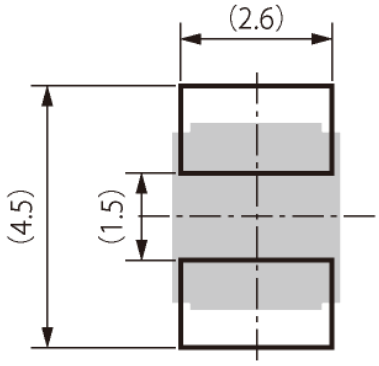

Emitting color variation

Part name	Materials	Emitting color	Resin color	Dominant wavelength λ_d (nm)		Luminous intensity Iv (mcd)			Luminous flux φv (lm)	
				TYP.	I_F(mA)	MIN.	TYP.	I_F(mA)	TYP.	I_F(mA)
VFHG1104LS	AlGaInP	Green	Water clear	561	20	18	25	20	0.10	20
VFJG1104LS					20	27	37	20	0.12	20
VFHP1104LS		Yellow green		570	20	56	78	20	0.30	20
VFJP1104LS				572	20	82	120	20	0.38	20
VFGP1104LS				570	50	180	255	50	0.80	50
VFHY1104LS		Yellow		589	20	120	170	20	0.54	20
VFJY1104LS					20	180	255	20	0.81	20
VFGY1104LS					50	470	645	50	2.03	50
VFHA1104LS		Orange		606	20	120	170	20	0.54	20
VFGA1104LS					50	680	910	50	2.87	50
VFHV1104LS		Red		616	20	120	170	20	0.54	20
VFGV1104LS					50	680	940	50	2.97	50
VFHR1104LS				626	20	100	140	20	0.44	20
VFJR1104LS				632	20	150	210	20	0.66	20

Sorting chart for Luminous intensity and Emitting color

Part name	Luminous intensity Iv (mcd)			Dominant wavelength λd (nm)			Conditions
	Rank	MIN.	MAX.	Rank	MIN.	MAX.	
VFHG1104LS	B4	18	22	C	558	561	Ta=25℃ 20mA
	B5	22	27	D	561	564	
	B6	27	33				

Part name	Luminous intensity Iv (mcd)			Dominant wavelength λd (nm)			Conditions
	Rank	MIN.	MAX.	Rank	MIN.	MAX.	
VFJG1104LS	B6	27	33	C	558	561	Ta=25℃ 20mA
	B7	33	39	D	561	564	
	B8	39	47				

Part name	Luminous intensity Iv (mcd)			Dominant wavelength λd (nm)			Conditions
	Rank	MIN.	MAX.	Rank	MIN.	MAX.	
VFHP1104LS	BX	56	68	A	567	570	Ta=25℃ 20mA
	BY	68	82	B	570	573	
	BZ	82	100				

Part name	Luminous intensity Iv (mcd)			Dominant wavelength λd (nm)			Conditions
	Rank	MIN.	MAX.	Rank	MIN.	MAX.	
VFJP1104LS	BZ	82	100	A	567	570	Ta=25℃ 20mA
	C1	100	120	B	570	573	
	C2	120	150	C	573	576	
	C3	150	180				

Part name	Luminous intensity Iv (mcd)			Dominant wavelength λd (nm)			Conditions
	Rank	MIN.	MAX.	Rank	MIN.	MAX.	
VFGP1104LS	C4	180	220	A	567	570	Ta=25℃ 50mA
	C5	220	270	B	570	573	
	C6	270	330				

Sorting chart for Luminous intensity and Emitting color

Part name	Luminous intensity Iv (mcd)			Dominant wavelength λd (nm)			Conditions
	Rank	MIN.	MAX.	Rank	MIN.	MAX.	
VFHY1104LS	C2	120	150	D	586	589	Ta=25℃ 20mA
	C3	150	180	E	589	592	
	C4	180	220				

Part name	Luminous intensity Iv (mcd)			Dominant wavelength λd (nm)			Conditions
	Rank	MIN.	MAX.	Rank	MIN.	MAX.	
VFJY1104LS	C4	180	220	D	586	589	Ta=25℃ 20mA
	C5	220	270	E	589	592	
	C6	270	330				

Part name	Luminous intensity Iv (mcd)			Dominant wavelength λd (nm)			Conditions
	Rank	MIN.	MAX.	Rank	MIN.	MAX.	
VFGY1104LS	C9	470	560	D	586	589	Ta=25℃ 50mA
	CX	560	680	E	589	592	
	CY	680	820				

Part name	Luminous intensity Iv (mcd)			Dominant wavelength λd (nm)			Conditions
	Rank	MIN.	MAX.	Rank	MIN.	MAX.	
VFHA1104LS	C2	120	150	C	603	606	Ta=25℃ 20mA
	C3	150	180	D	606	609	
	C4	180	220				

Part name	Luminous intensity Iv (mcd)			Dominant wavelength λd (nm)			Conditions
	Rank	MIN.	MAX.	Rank	MIN.	MAX.	
VFGA1104LS	CY	680	820	C	603	606	Ta=25℃ 50mA
	CZ	820	1,000	D	606	609	
	D1	1,000	1,200				

Sorting chart for Luminous intensity and Emitting color

Part name	Luminous intensity Iv (mcd)			Dominant wavelength λd (nm)			Conditions
	Rank	MIN.	MAX.	Rank	MIN.	MAX.	
VFHV1104LS	C2	120	150	B	613	616	Ta=25℃ 20mA
	C3	150	180	C	616	619	
	C4	180	220				

Part name	Luminous intensity Iv (mcd)			Dominant wavelength λd (nm)			Conditions
	Rank	MIN.	MAX.	Rank	MIN.	MAX.	
VFGV1104LS	CY	680	820	B	613	616	Ta=25℃ 50mA
	CZ	820	1,000	C	616	619	
	D1	1,000	1,200				

Part name	Luminous intensity Iv (mcd)			Dominant wavelength λd (nm)			Conditions
	Rank	MIN.	MAX.	Rank	MIN.	MAX.	
VFHR1104LS	C1	100	120	A	620	626	Ta=25℃ 20mA
	C2	120	150	B	626	632	
	C3	150	180				

Part name	Luminous intensity Iv (mcd)			Dominant wavelength λd (nm)			Conditions
	Rank	MIN.	MAX.	Rank	MIN.	MAX.	
VFJR1104LS	C3	150	180	B	626	632	Ta=25℃ 20mA
	C4	180	220	C	632	638	
	C5	220	270				

【Soldering precaution】

(acc.to EIAJ-4701/300)

1. Heat stress during soldering will influence the reliability of LEDs, however that effect will vary on heating method. Also, if components of varying shape are soldered together, it is recommended to set the soldering pad temperature according to the component most vulnerable to heat (e.g., surface mount LED).

2. LED parts including the resin are not stable immediately after soldering (when they are not at room temperature), any mechanical stress may cause damage to the product. Please avoid such stress after soldering, especially stacking of the boards which may cause the boards to warp and any other types of friction with hard materials.

3. Recommended temperature profile for the Reflow soldering is listed as the temperature of the resin surface. Temperature distribution varies on heating method, PCB material, other components in the assembly, and mounting density.
   Please do not repeat the heating process in Reflow process more than twice.

【Recommended reflow soldering condition】

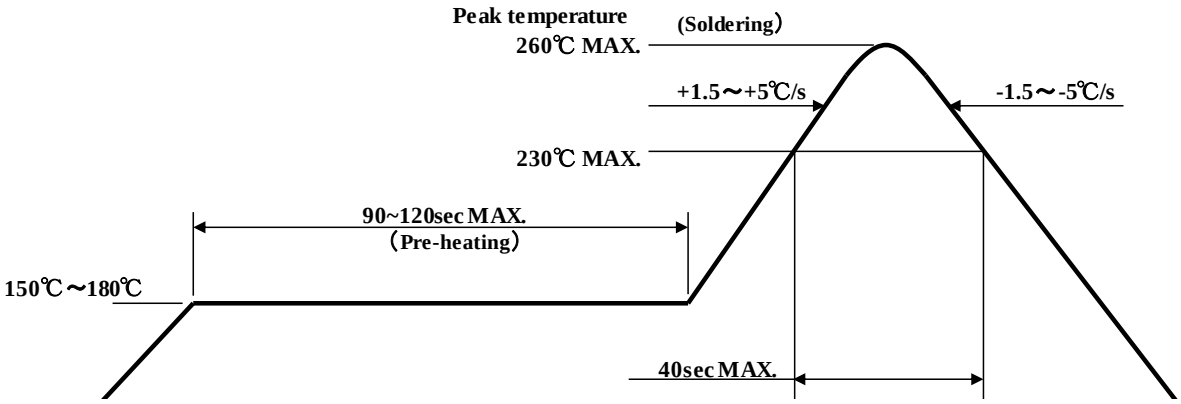

Note 1
Recommended temperature profile for the reflow soldering is listed as the temperature of the resin surface. This should be the maximum temperature for soldering. Lowering the heating temperature and decreasing heating time is very effective in achieving higher reliability.

Note 2
The reflow soldering process should be done up to twice(2 times Max). When second process is performed, interval between first and second process should be as short as possible to prevent absorption of moisture to resin of LED. The second soldering process should not be done until LEDs have returned to room temperature (by nature-cooling) after first soldering process.

4. If soldering manually, Stanley recommends using a soldering iron equipped with temperature control. During the actual soldering process, make sure that the soldering iron never touch the LED itself, and avoid the LED's electrode heating temperature reaching above the heating temperature of the solder pad. All repairs must be performed only once in the same spot, and please avoid reusing components.

5. In soldering process, immediately after iron tip is cleaned, please make sure that the soldering iron reaches the appropriate temperature before using. Also, please avoid applying any type of pressure to the soldered components before the solder has been cooled and hardened, as it may deteriorate solder performance and solder quality.

【Recommended manual soldering condition】

Temperature of Iron tip	350℃MAX.
Soldering duration, Time	3sec.Max.,1 time

6. When using adhesive material for tentative fixatives, thermosetting resin or Ultraviolet radiation (UV) setting resin with heat shall be recommended.
《The curing condition, Temperature:150℃Max./Time:120sec.Max.》

7. Flow soldering (dip soldering) is not recommended for this product.

8. lsopropyl alcohol is recommended for cleaning. Some chemicals, including Freon substitute detergent could corrode the lens or the casing surface, which cause discoloration, cloud, crack and so on. Please review the reference chart below for cleaning. If water is used to clean (including the final cleaning process), please use pure water (not tap water), and completely dry the component before using.

Cleaning agents	Recommended / Not recommended
Isopropyl alcohol	✓ **Recommended**
Trichloroethylene	x **Not recommended**
Chlorothene	x **Not recommended**
Acetone	x **Not recommended**
Thinner	x **Not recommended**

【Other precautions】

1. Stanley LED Lamps have semiconductor characteristics and are designed to ensure high reliability. However, the performance may vary depending on usage conditions

2. Absolute maximum ratings are set to prevent LED lamps from failing due to excess stress(temperature, current, voltage, etc.). Usage conditions must not exceed the ratings for a moment, nor do reach one item of absolute maximum ratings simultaneously.

3. In order to ensure high reliability from LED Lamps, variable factors that arise in actual usage conditions should be taken into account for designing. (Derating of TYP., MAX Forward voltage, etc.)

4. Please insert protective resistors into the circuit in order to stabilize LED operation and to prevent the device from igniting due to excess current.

5. Please check the actual performance in the assembly because the specification sheets are described for LED device only.

6. Please refrain from looking directly at the light source of LED at high output, as it may harm your vision.

7. The products are designed to operate without failure in recommended usage conditions. However, please take the necessary precautions to prevent fire, injury, and other damages should any malfunction or failure arise.

8. The products are manufactured to be used for ordinary electronic equipment. Please contact our sales staff beforehand when exceptional quality and reliability are required, and the failure or malfunction of the products might directly jeopardize life or health (such as for airplanes, aerospace, transport equipment, medical applications, nuclear reactor control systems and so on).

9. When there is a process of supersonic wave welding etc. after mounting the product, there is a possibility of affecting on the reliability of junction part in package (junction part of die bonding and wire bonding). Please make sure there is no problem before using.

10. The formal specification sheets shall be valid only by exchange of documents signed by both parties.

【Handling precautions for product mounting】

＜Recommendation＞

1. Picking up point with nozzle: Lamp housing of the product (▨ area) (Shown below)

   The picking up point should be within lamp housing portion, because the silicone resin used for the lens is soft. (If the nozzle makes contact with the lens, the products might be destroyed)

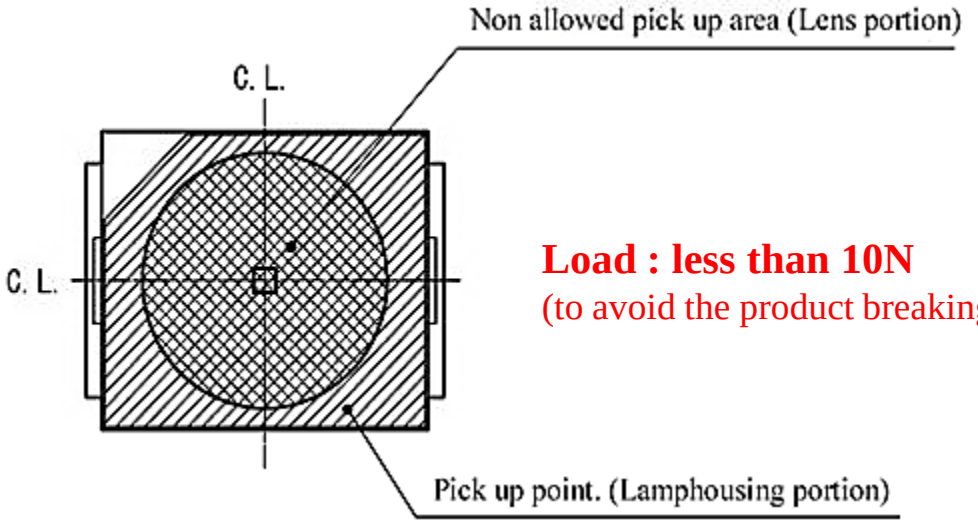

Load : less than 10N
(to avoid the product breaking)

Please adjust the load, the pick up point, the nozzle diameter, etc. before mounting because the over load can cause the breakage of the lamp housing.

2. Recommended Nozzle shape

a

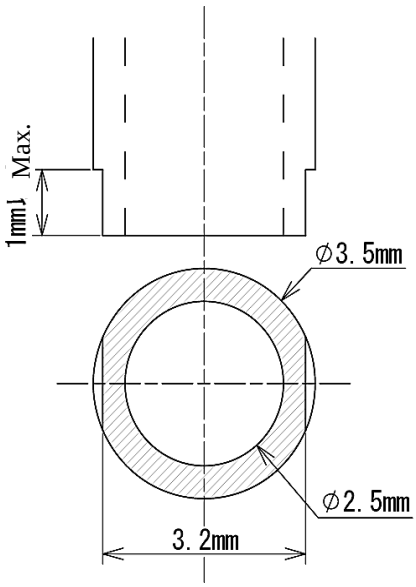

b

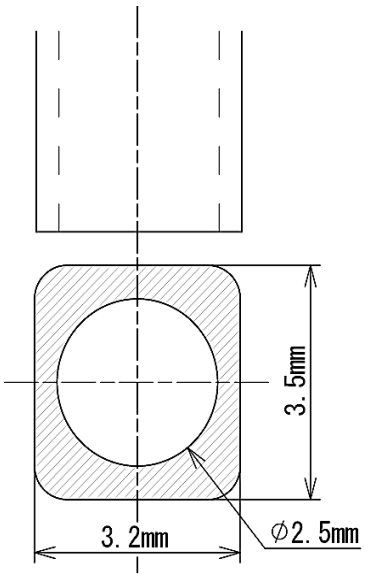

※Nozzle with chamfering is recommended

Packaging specifications 1104LS series

This product is baked (moisture removal) before packaging, and is shipped in moisture-proof packaging (as shown below) to minimize moisture absorption during transportation and storage. However, with regard to storing the products, Stanley recommends the use of dry-box under the following conditions is recommended. Moisture-proof bag as the packaging is made of anti-static material but packaging box is not.

【Recommended storage condition / Products warranty period】

Temperature	+5～30℃
Humidity	Under 70%

In the case of the package unopened , **6 months** under【 Recommended Storage Condition 】.
Please avoid rapid transition from low temp. condition to high temp. condition
and storage in corroding and dusty environment.

【Time elapsed after package opening】

The package should not be opened until immediately prior to its use, and please keep the time frame between package opening and soldering as is **【maximum 4weeks(672h)】**.
If the device needs to be soldered twice, both soldering operations must be completed within the 4weeks(672h).

If any components should remain unused, please reseal the package and store them under the conditions described in the【 Recommended storage condition 】above.

This product must be required to perform baking process (moisture removal) for
at 48h(MIN.) to 72h(MAX.) at 60±5 degrees Celsius if following conditions apply.

1.In the case of silica gel (blue) which indicates the moisture level within the package, changes or loses its blue color.

2. In the case of time passes for 4weeks(672h) after the package is opened once.

Baking process should be performed after LED having been taken out of the package.

Baking may be performed in the tape-reel form , however if it is performed with the reel stacked over one another, it may cause deformation of the reels and taping materials and later obstruct mounting. Please handle only once it has returned to room temperature. Provided that, baking process shall be 2 times MAX.

【Moisture-proof packaging specification】

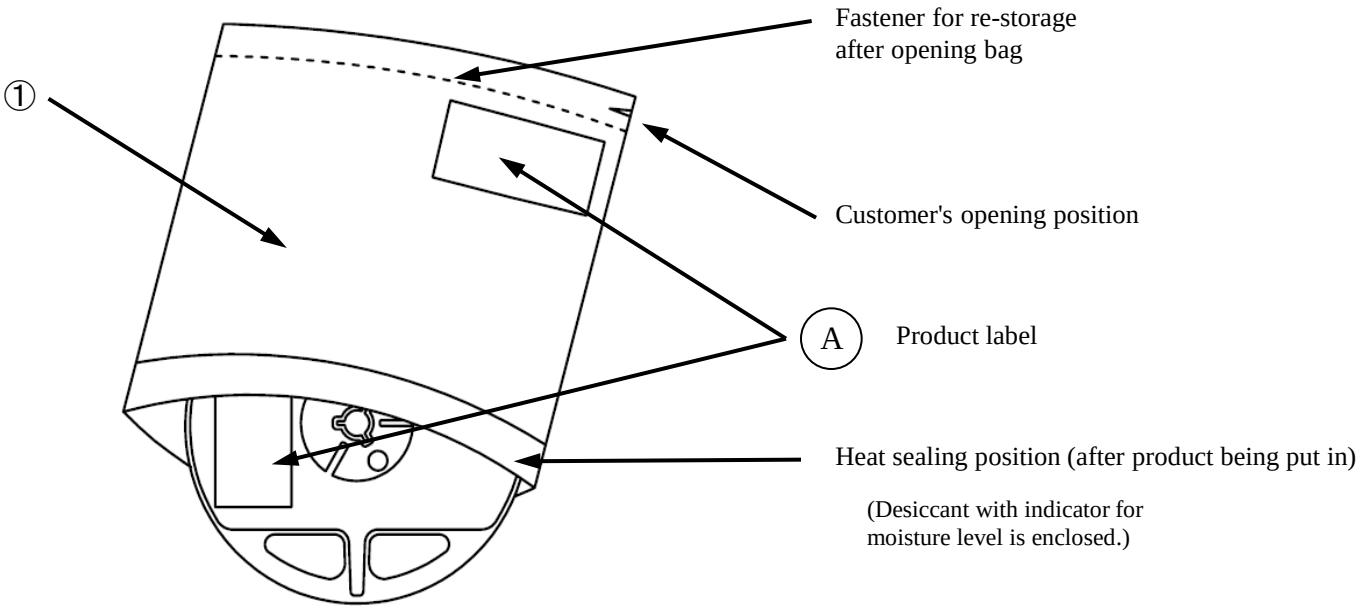

NO.	PART NAME	MATELRIAL	REMARKS
①	Moisture-proof bag with Aluminum layer	PET+Al+PE	with ESD protection

【Flow chart : package opening to mounting】

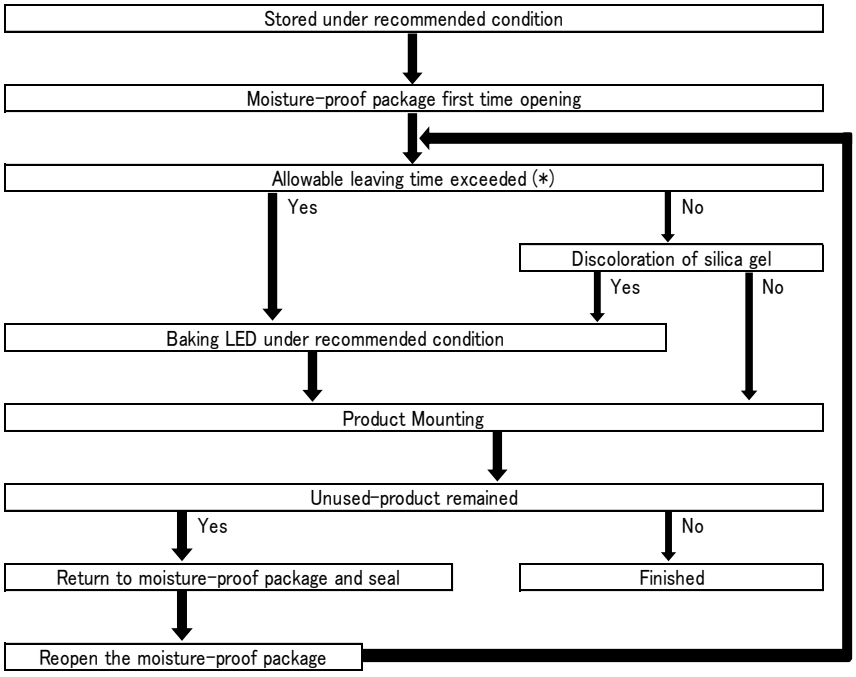

Allowable leaving time means the maximum allowable leaving time after opening package, which depends on each LED type.
The allowable leaving time should be calculated form the first opening of package to the time when soldering process is finished.
When judging if the allowable leaving time has exceeded or not, please subtract the soldering time. The allowable leaving time after reopening should be calculated form the first opening of package, or from the time when baking process is finished.

【Packing box】

(RoHS･ELV Compliant)

Box type	Outline dimension L × W × H (mm)	Capacity of the box
Type A	280 × 265 × 45	3 reels
Type B	310 × 235 × 265	15 reels
Type C	440 × 310 × 265	30 reels

The above measures are all the reference values.

The box is selected out of the above table by shipping quantity.

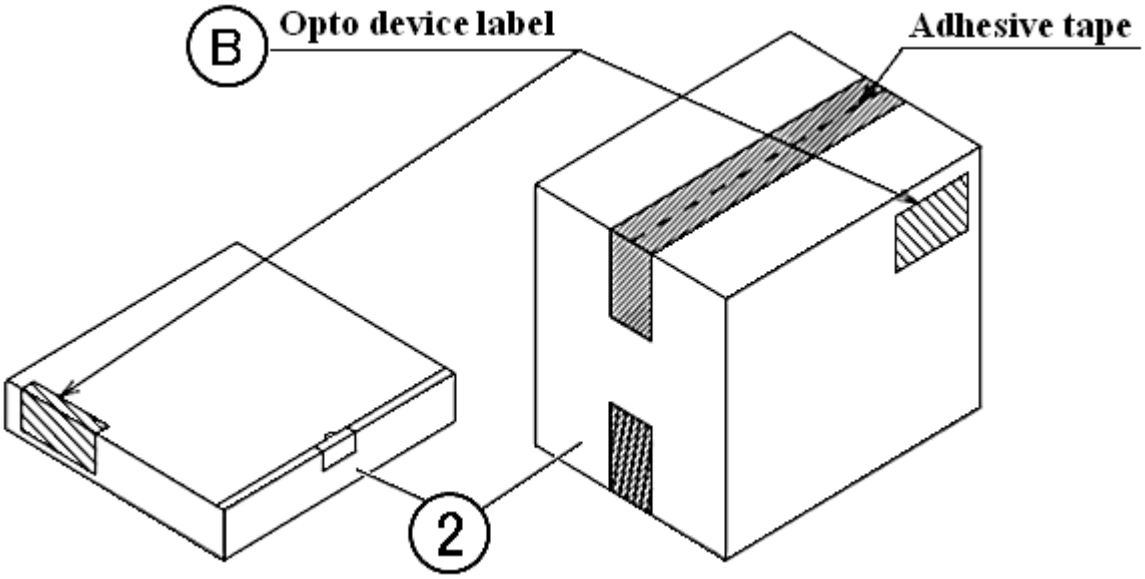

Type A

Material / box : Cardboard C5BF

Type B,C

Material / box : Cardboard K5AF

Partition : Cardboard K5BF

NO.	PART NAME	MATERIAL	REMARKS
②	Packing Box	Corrugated Cardbord	without ESD protection

【Label Specification】

(acc.to JIS-X0503(Code-39)

(A) Product label

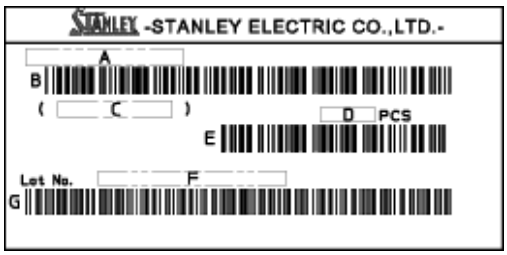

A. Parts number

B. Bar-code for parts number

C. Parts code (In-house identification code for each parts number)

D. Packed parts quantity

E. Bar-code for packed parts quantity

F. Lot number & Rank

(refer to lot number notational system for details)

G. Bar-code for Lot number & rank

(B) Opto device label

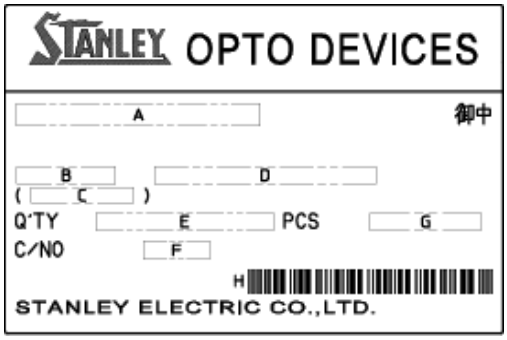

A. Customer name

B. Parts type

C. Parts code

D. Parts number

E. Packed parts quantity

F. Carton number

G. Shipping date

H. Bar-code for In-house identification number

<Remarks> Bar-code font : acc.to Code-39(JIS-X0503)

(acc.to JIS-C0806-03)

【Appearance】

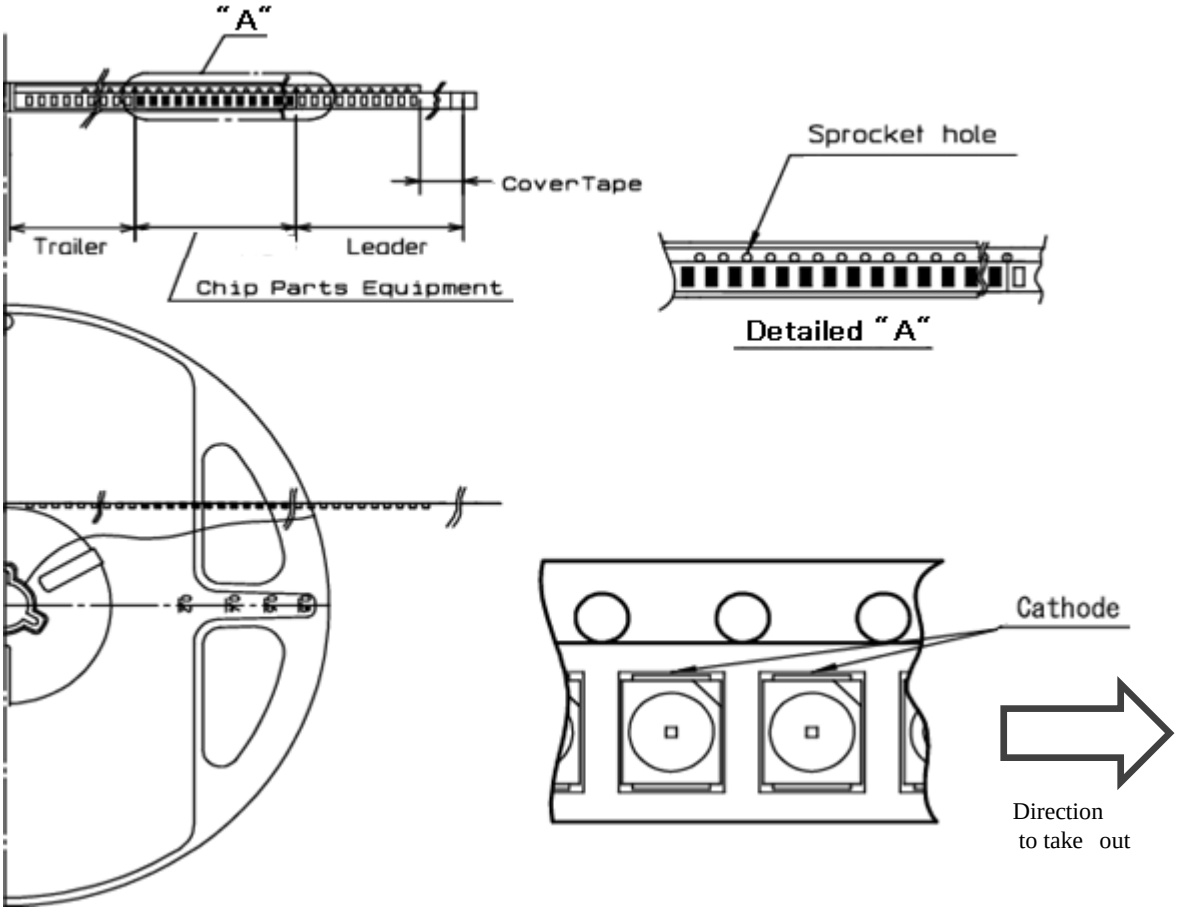

Note

"-TR" means cathode side of LEDs should be placed on the sprocket-hole side.

Items		Specifications	Remarks
Leader area	Cover-tape	Cover-tape shall be longer than 320mm without carrier-tape	The end of cover-tape shall be held with adhesive tape.
	Carrier-tape	Empty pocket shall be more than 20 pieces.	Please refer to the above figure for Taping & reel orientation .
Trailer area		Empty pocket shall be more than 15 pieces.	The end of taping shall be inserted into a slit of the hub.

(acc.to JIS-C0806-03)

【Qty. per reel】

2,000parts/reel
Minimum Qty. per reel might be 500 parts when getting less than 2,000 parts. In such case, parts of 500-unit-qty. shall be packed in a reel and the qty. shall be identified on the label.

【Mechanical strength】

Cover-tape adhesive strength shall be 0.1～1.0N (An angle between carrier-tape and cover-tape shall be170 deg.) Both tapes shall be so sealed that the contained parts will not come out from the tape when it is bent at a radius of 15mm.

【Others】

Reversed-orientation, Up-side down placing, side placing and out of spec. parts mixing shall not be held. Max. qty. of empty pocket per reel shall be defined as follows.

Qty./reel	Max. qty. of empty pocket	Remarks
500	1	-
1,000	1	-
1,500	1	-
2,000	2	No continuance

Unit : mm

(acc.to JIS-C0806-03)

【Taping dimensions】

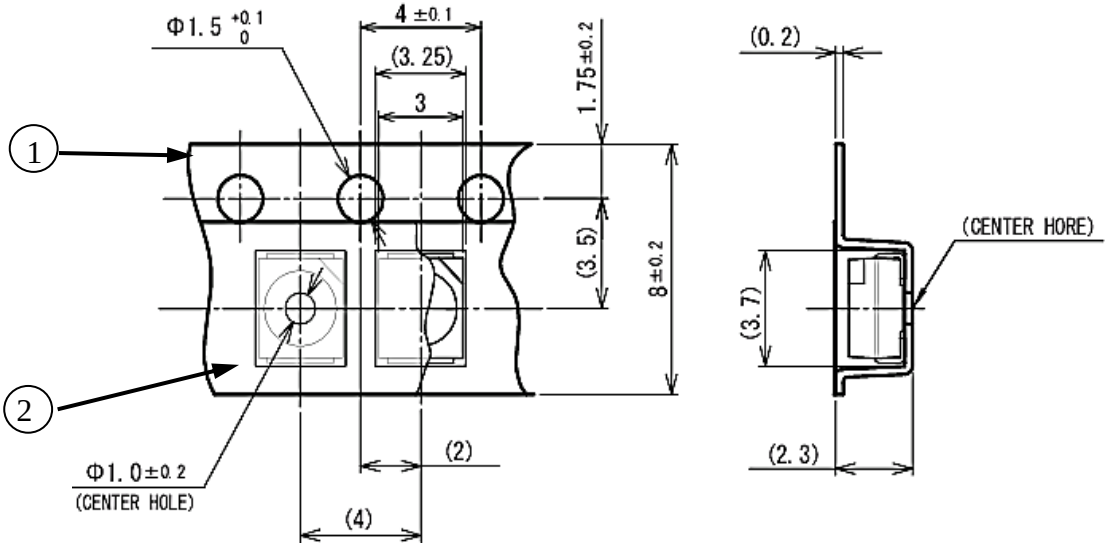

【Reel dimensions】

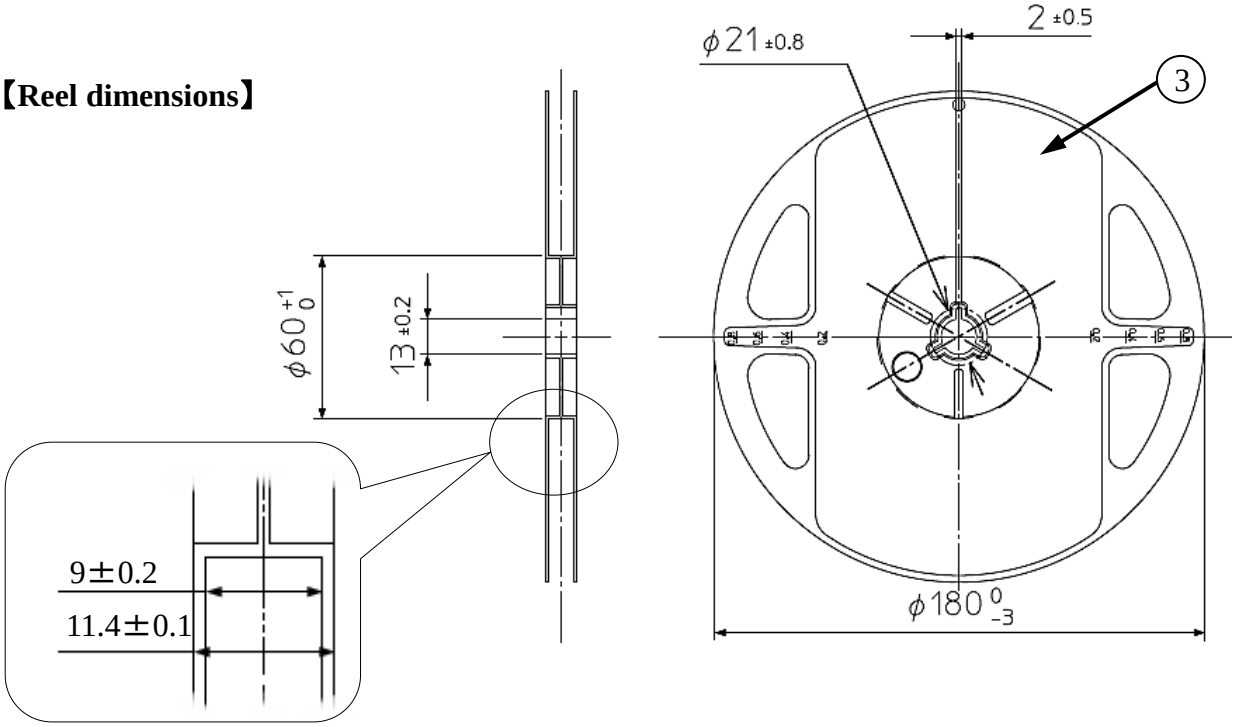

NO.	PART NAME	REMARKS
①	Carrier-tape	with ESD protection
②	Cover-tape	with ESD protection
③	Carrier-reel	with ESD protection

Lot number notational system

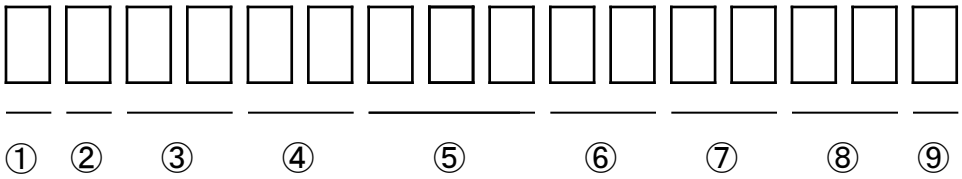

① - 1digit：Production location (Mark identify alphabet)

② - 1digit：Production year (Last digit of Production Year 2020→0, 2021→1, 2022→2, 2023→3, ･･･)

③ - 2digits：Production month (Jan. to Sep. , should be 01,02,03,･････)

④ - 2digits：Production date

⑤ - 3digits：Serial number

⑥ - 2digits：Tape and reel following number

⑦ - 2digits：Luminous intensity rank.

(If luminous intensity rank is 1 digit, "-" shall be dashed on the place for the second digit.

If there is no identified intensity rank, "- -" is used to indicate.)

⑧ - 2digits：Chromaticity rank

(If chromaticity rank is 1 digit, "-" shall be dashed on the place for the second digit.

If there is no identified intensity rank, "- -" is used to indicate.)

⑨ - 1digit：Option rank (Stanley normally print "-" to indicate)

Correspondence to RoHS･ELV instruction

This product is in compliance with RoHS･ELV.

Prohibition substance and it's criteria value of RoHS･ELV are as follows.

･RoHS instruction …… Refer to following (1)～(6).
･ELV instruction ……. Refer to following (1)～(4).

	Substance group name	Criteria value
(1)	Lead and its compounds	1,000ppm Max
(2)	Cadmium and its compounds	100ppm Max
(3)	Mercury and its compounds	1,000ppm Max
(4)	Hexavalent chromium	1,000ppm Max
(5)	PBB	1,000ppm Max
(6)	PBDE	1,000ppm Max

Reliability testing result

Reliability testing result	Applicable standard	Testing conditions	Duration	Failure
Room temp. operating life	EIAJ ED-4701/100(101)	Ta = 25℃, IF = Maxium rated current	1,000 h	0/20
High temp. operating life	EIAJ ED-4701/100(101)	Ta = 85℃ I_F = Derating Value	1,000 h	0/20
Low temp. operating life	EIAJ ED-4701/100(101)	Ta = -40℃, I_F = Maxium rated current	1,000 h	0/20
Wet high temp. operating life	EIAJ ED-4701/100(102)	Ta = 60℃, 90%RH, I_F = Maxium rated current	1,000 h	0/20
Wet high temp. storage life	EIAJ ED-4701/100(103)	Ta = 60℃, 90%RH	1,000 h	0/20
Thermal shock	EIAJ ED-4701/100(105)	Ta = -40℃ ～ 120℃ (each 15min.)	1,000 cycles	0/20
Thermal shock operating	EIAJ ED-4701/100(105)	Ta = -40℃(OFF) ～ 85℃(ON) each 15min. I_F = Derating value	1,000 cycles	0/20
High temp. storage life	EIAJ ED-4701/200(201)	Ta = 120℃	1,000 h	0/20
Low temp. storage life	EIAJ ED-4701/200(202)	Ta = -40℃	1,000 h	0/20
Cycled temp. humidity operating life	EIAJ ED-4701/200(203)	Ta = -30℃(2h) ～ 80℃, 95%RH(2h), 8h/cycle I_F = Derating value 5min on-off	30 cycles	0/20
Resistance to reflow soldering	EIAJ ED-4701/300(301)	Moisture soak : 30℃, 70%RH, 672h Preheat : 150℃～180℃ (120s Max.) Soldering temp. : 260℃ (5s)	2 times	0/20
Electric static discharge (ESD)※1	EIAJ ED-4701/300(304)	C = 100pF, R2 = 1.5KΩ, ±2,000V	once each polarity	0/10
Vibration, Variable frequency	EIAJ ED-4701/400(403)	98.1m/s^2 (10G), 100 ～ 2KHz, 20min. XYZ each direction	2 h	0/10

※1 Reference test

Failure criteria

Items	Symbols	Conditions	Failure criteria
Luminous intensity	Iv	I_F value of each product luminous intensity	Testing min. value ＜ Spec. min. value x 0.5
Forward voltage	V_F	I_F value of each product forward voltage	Testing max. value ≧ Spec. max. value x 1.2
Reverse current	I_R	V_R = Maximum rated reverse voltage	Testing max. value ≧ Spec. max. value x 2.5
Cosmetic appearance	-	-	Occurrence of notable decoloration, deformation and cracking

Special Notice to Customers Using the Products and Technical Information Shown in This Data Sheet

1) The technical information shown in the data sheets are limited to the typical characteristics and circuit examples of the referenced products. It does not constitute the warranting of industrial property nor the granting of any license.

2) For the purpose of product improvement, the specifications, characteristics and technical data described in the data sheets are subject to change without prior notice. Therefore it is recommended that the most updated specifications be used in your design.

3) When using the products described in the data sheets, please adhere to the maximum ratings for operating voltage, heat dissipation characteristics, and other precautions for use. We are not responsible for any damage which may occur if these specifications are exceeded.

4) The products that have been described to this catalog are manufactured so that they will be used for the electrical instrument of the benchmark (OA equipment, telecommunications equipment, AV machine, home appliance and measuring instrument).
The application of aircrafts, space borne application, transportation equipment, medical equipment and nuclear power control equipment, etc. needs a high reliability and safety, and the breakdown and the wrong operation might influence the life or the human body. Please consult us beforehand if you plan to use our product for the usages of aircrafts, space borne application, transportation equipment, medical equipment and nuclear power control equipment, etc. except OA equipment, telecommunications equipment, AV machine, home appliance and measuring instrument.

5) In order to export the products or technologies described in this data sheet which are under the "Foreign Exchange and Foreign Trade Control Law," it is necessary to first obtain an export permit from the Japanese government.

6) No part of this data sheet may be reprinted or reproduced without prior written permission from Stanley Electric Co., Ltd.

7) The most updated edition of this data sheet can be obtained from the address below:
http://www.stanley-components.com/en/